REVISIONS			
REV.	REV. DESCRIPTION	REV. DATE	REV. BY
C	INITIAL INSTALLATION PROTOTYPE		

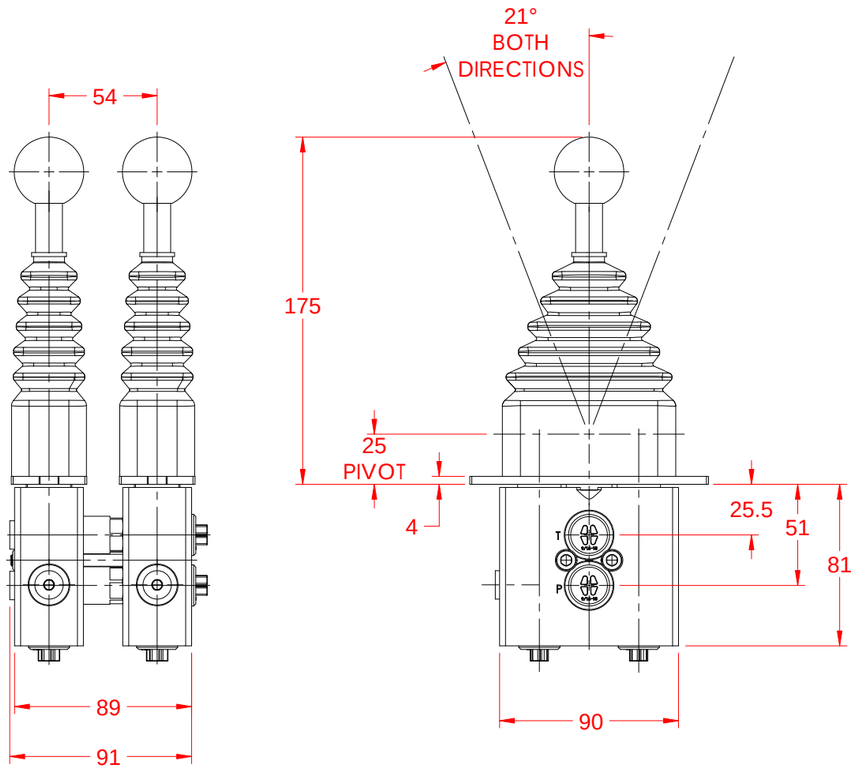

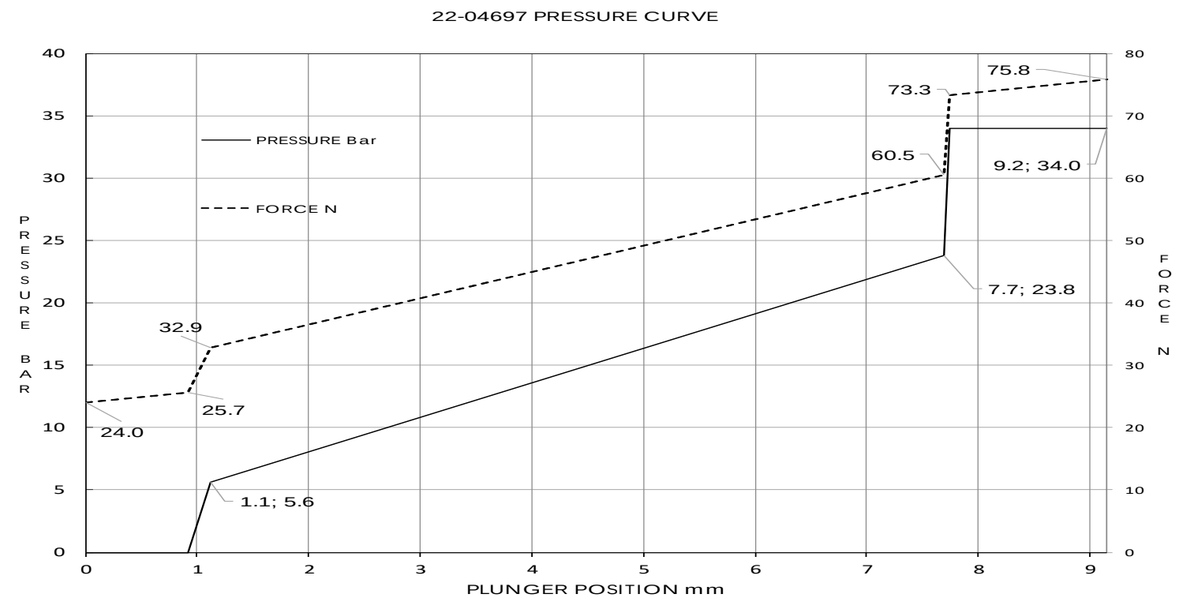

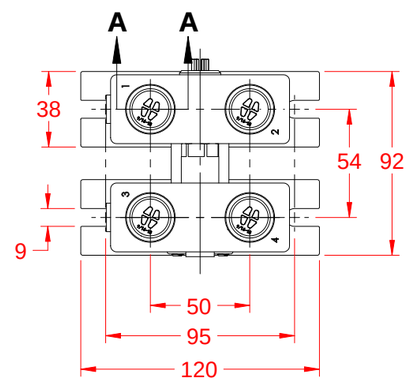

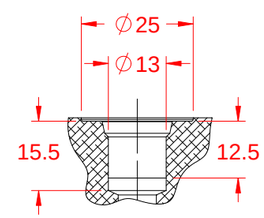

SECTION **A-A**
STOR-6 PORT SAE J-1926-1
(9/16-18 UNF-2B)
SCALE 3 : 4

HYDRAULIC SCHEMATIC

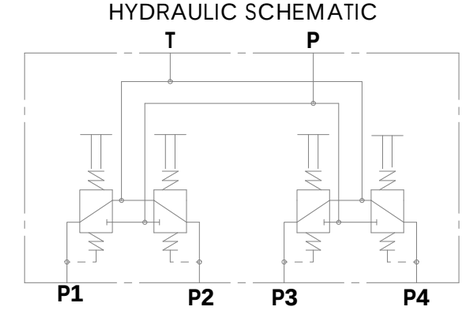

HYDRAULIC SPECIFICATION:

1. MAXIMUM INPUT PRESSURE: 60 Bar
2. RATED PRESSURE: 34 Bar
3. MAXIMUM RETURN PRESSURE: 3 Bar
4. OUTPUT PRESSURE: SEE PRESSURE CURVE GRAPH
5. MAXIMUM NATURAL LEAKAGE: 48mL/MIN
6. MAXIMUM WORKING LEAKAGE: 35mL/MIN/CARTRIDGE
7. OIL: MINERAL OIL (10W RECOMMENDED)
8. WORKING FLOW: 20 L/min
9. TEMPERATURE: -20° ~ 90°C

PRINCE INDUSTRIES INC.
PROPRIETARY
THIS DOCUMENT CONTAINS CONFIDENTIAL PROPRIETARY INFORMATION THAT IS PRINCE IND. INC. PROPERTY. DO NOT DISCLOSE TO OR DUPLICATE FOR OTHERS EXCEPT AS AUTHORIZED BY PRINCE IND. INC.

SOLIDWORKS / ENTERPRISE PDM CONTROLLED DOCUMENT. ALL COPIES ARE REFERENCE

UNLESS OTHERWISE SPECIFIED TOLERANCES ARE:
SURF. FINISH 3.2
.X ±0.25
.XX ±0.13
ANGLES ±1°
CORNERS/EDGES C/R 0.4 MAX

MATERIALS:

FINISH:

METRIC	NAME	DATE
DRAWN		02/14/2023
CHECKED		
APPROVED		

THIRD ANGLE PROJECTION

ITEM

QTY

QP Hydraulics

DIVISION OF PRINCE INDUSTRIES, INC.

DESCRIPTION: PILOT VALVE - SLH+1-446 (INSTALLATION)

DESCRIPTION CODE: SLH - 4NSSSS - B00 - S3A

PART NO: 22-04697

REV: C

Make Your Hydraulic Flow and Pressure Solutions Easy

WEIGHT: g

SCALE: 1:10

SOLIDWORKS

SHEET 1 OF 1

METRIC