REVISIONS			
REV.	REV. DESCRIPTION	REV. DATE	REV. BY
A			

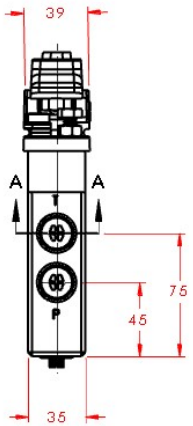

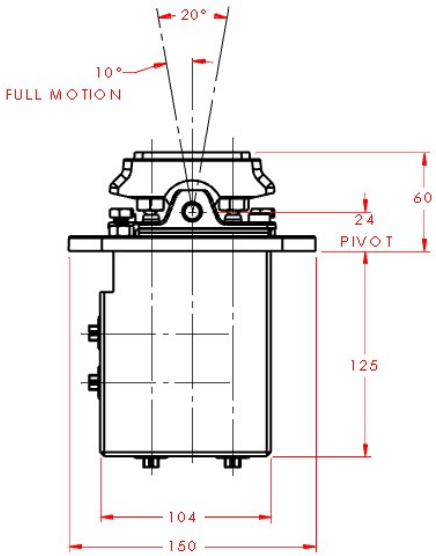

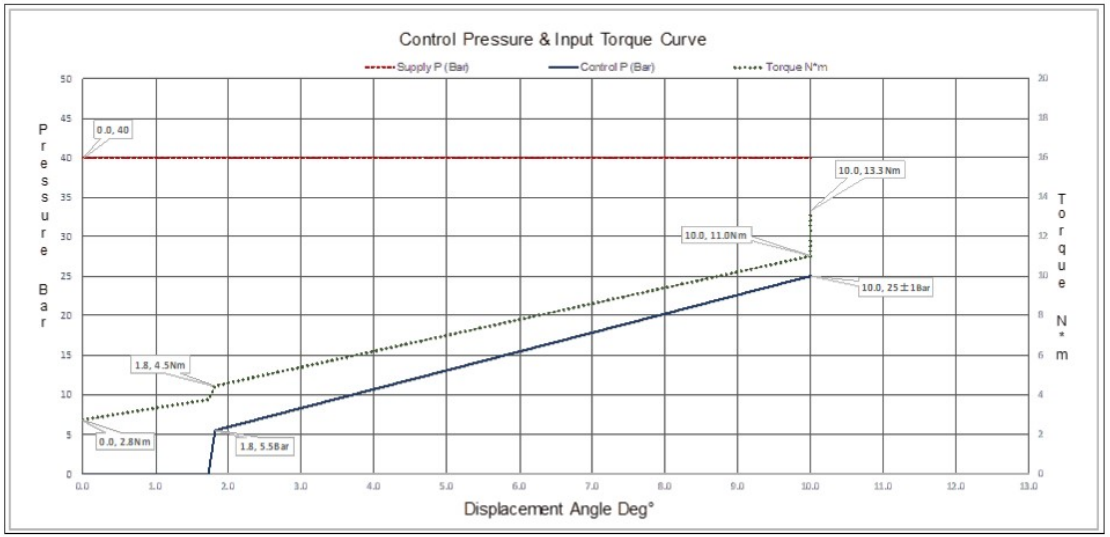

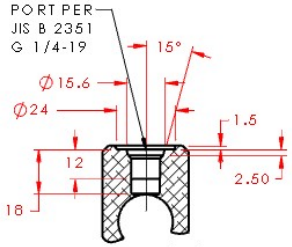

SECTION A-A
PORT DETAIL P, T, 1, & 2
SCALE 1 : 2

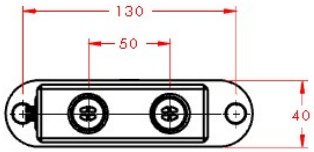

HYDRAULIC SCHEMATIC

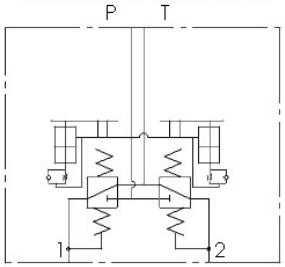

HYDRAULIC SPECIFICATION:

1. MAXIMUM INPUT PRESSURE: 100 kgf/cm^2
2. WORKING INPUT PRESSURE: 40 kgf/cm^2
3. MAXIMUM ADAPTER INSTALL TORQUE: 390 kgf·cm
4. OIL: MINERAL OIL (10W RECOMMENDED)
5. FLOW: 20 L/min
6. TEMPERATURE: -20° ~ 90°C

PRINCE INDUSTRIES INC.
PROPRIETARY

SOLIDWORKS / ENTERPRISE PDM CONTROLLED DOCUMENT. ALL COPIES ARE REFERENCE

METRIC	NAME	DATE
DRAWN		02/14/2023
CHECKED		
APPROVED		

QP Hydraulics

DIVISION OF PRINCE INDUSTRIES, INC.

DESCRIPTION: FOOT PEDAL 28-5.5-25BAR DAMPENING (INSTALLATION)

DESCRIPTION CODE: FP8-12NS-NG-S

PART NO: 22-04715 | REV: A

WEIGHT: 2293 g | SCALE: 1:3

SOLIDWORKS | SHEET 1 OF 1

B METRIC